UMTS 2100 Duplexer, BL-36 series

Low Cost Duplexer Filter for UMTS or IMT, 80W
1920-1980/2110-2170 MHz
Rev. A

Preliminary Specification

- Combines or Splits Tx and Rx Signals for UMTS 2100 Systems
- Guaranteed Low PIM
- High Isolation
- Low Insertion Loss
- Up to 80W power on Tx
- High reliability
- RoHS Compliant

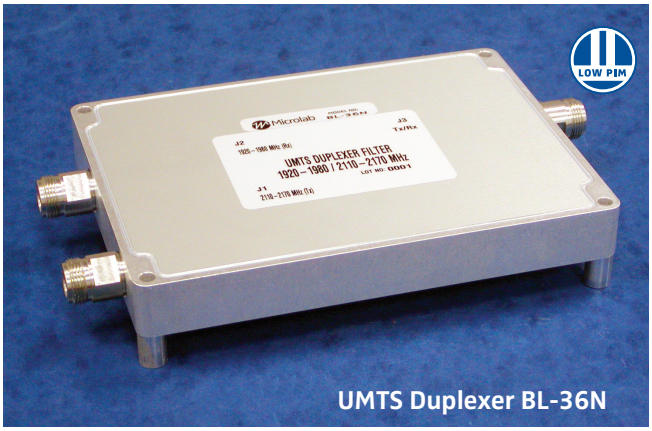

UMTS Duplexer BL-36N

	Model/Connector N (f)	7-16 (f)
UMTS Duplexer Filter	**BL-36N**	**BL-36D**

Microlab Duplexer, BL-36 series allows low cost combination and separation of the Tx and Rx signals in the UMTS band used in Europe, Asia and elsewhere.

Isolation from the Tx signals into the Rx band are greater than 50dB, while the less important Rx signals into the Tx band are greater than 35dB.

Units use a suspended substrate design for lower cost, while providing adequate isolation, low PIM and low insertion loss for most applications. Attention to mechanical design, ensures low loss, and high reliability. (08/14).

Tx Passband:	2110-2170 MHz (Tx Port)
Rx Passband:	1920-1980 MHz (Rx Port)
Insertion Loss:	1.2 dB max
Passband Ripple:	0.7 dB max
Input Isolation:	>50dB (from Tx into Rx band) >35dB (from Rx into Tx band)
Return Loss, all ports:	18 dB min.
DC Continuity:	Between All Ports
PIM (Intermod):	<-153 dBc (measured in Rx Block using two +43 dBm tones in Tx Block)
Power Rating:	80W avg. (Tx Port) 40W avg. (Rx Port)
Impedance:	50Ω nominal
Environment:	-30°C to +80°C, IP64
Finish: Connectors:	Triplated
Housing Finish:	RoHS passivated aluminum
Weight, nom:	2.0 lb., 0.9 kg

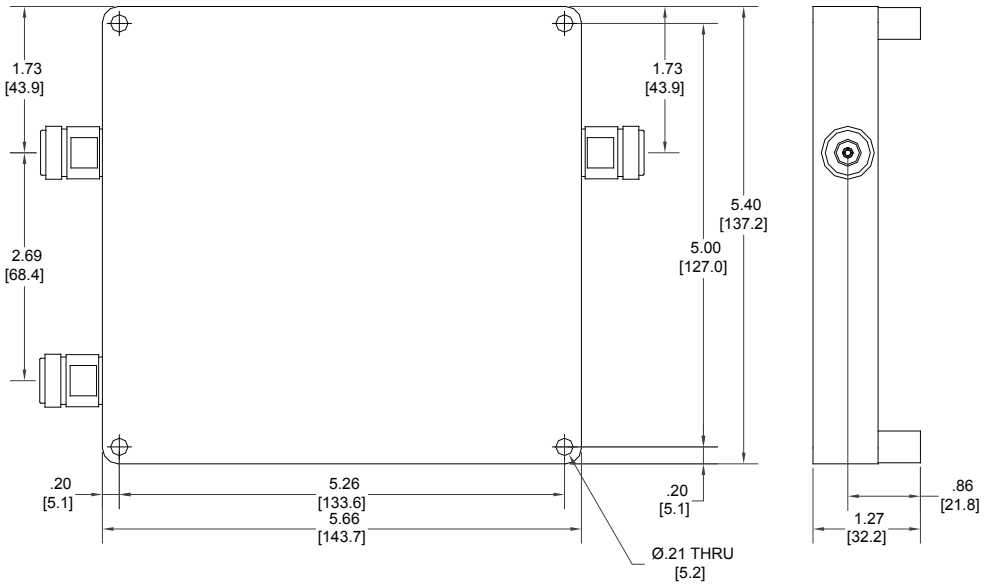

Microlab, A Wireless Telecom Group Company, 25 Eastmans Road, Parsippany, NJ 07054
Tel: (973) 386-9696 • sales@microlab.fxr.com • www.microlab.fxr.com • Fax: (973) 386-9191