# Power Splitters, Dx-64FN series

2, 3, 4, 6 & 8 way in-line Wilkinson Dividers
Low Loss, 800 - 2,500 MHz , N type
Rev. A

## *$ Saver Product*

**Product Line Discontinued, but may be available to special order**

- 800 - 2,500 MHz Multi-Band Frequency Range
- 5 & 10 W Power Rating
- Low RF Insertion Loss
- 20 dB Isolation
- RoHS compliant
- Low Cost N Design

Microlab Model Dx-64FN series of Wilkinson style Power Dividers has been designed for low power applications where output isolation is preferable over lowest possible loss. The wide frequency range of this design allows use with multiband antennas and leaky cable systems.

Lower loss dividers which enhance receive sensitivity and preserve transmitted power are available in the reactive splitters such as Dx-55FN and Dx-85FD series. (01/13)

| | |
|---|---|
| Bandwidth: | 800 - 2,500 MHz |
| Isolation: | >20 dB; 8 way >19 dB |
| VSWR, Input: | <1.3:1; 8 way <1.4:1 |
| VSWR, Output: | <1.3:1 |
| Impedance: | 50Ω nominal |
| Environment: | -40 to +85°C, Indoor |
| Housing: | Passivated Aluminum |
| Connectors: | N (f) triplate |

| Model Number | No. of Ways | Split Loss | Insertion Loss, max. | Amplitude Balance | Power Rating* | Weight oz. (g) | Dimensions, nom., inches (mm) A | B | C | D |
|---|---|---|---|---|---|---|---|---|---|---|
| **D2-64FN** | 2 | 3 dB | 0.3 dB | 0.3 dB | 10W avg. | 7.9 (220) | 2.00 (51) | 1.00 (25) | 2.50 (65) | 1.65 (42) |
| **D3-64FN** | 3 | 4.8 dB | 0.5 dB | 0.4 dB | 5W avg. | 12.5 (350) | 3.00 (76) | 1.50 (38) | 3.00 (76) | 2.80 (71) |
| **D4-64FN** | 4 | 6 dB | 0.5 dB | 0.4 dB | 10W avg. | 15.2 (425) | 4.00 (102) | 2.00 (51) | 2.75 (70) | 3.80 (97) |
| **D6-64FN** | 6 | 7.8 dB | 1.2 dB | 0.5 dB | 10W avg. | 30 (835) | 5.90 (150) | 2.95 (75) | 3.66 (93) | 5.67 (144) |
| **D8-64FN** | 8 | 9 dB | 1.5 dB | 0.6 dB | 10W avg. | 35 (980) | 7.90 (201) | 3.93 (100) | 3.12 (81) | 7.65.(194) |

*Used as divider into load(s) with VSWR <1.2:1

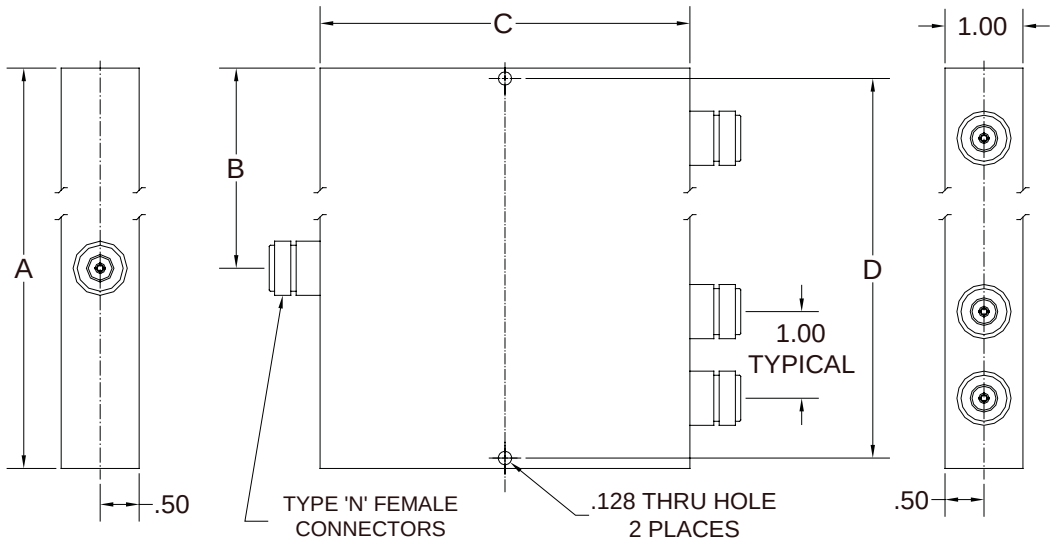


Microlab, A Wireless Telecom Group Company, 25 Eastmans Road, Parsippany, NJ 07054
Tel: (973) 386-9696 • sales@microlab.fxr.com • www.microlab.fxr.com • Fax: (973) 386-9191