Broadband Combiner Box, KM-99N

8 x 4 Combiner for Neutral Host In Building Systems
698 - 2,700 MHz, includes Output Test Port

Advanced Data

- Input bands for Cellular & LTE: 700/800/900 & 1800/1900/UMTS to 2700 MHz
- 8 Inputs to 4 Combined Outputs
- Lossless Concept, Guaranteed PIM
- High Reliability, RoHS
- Test port to monitor sum of outputs

These broadband RF Combiner Boxes have been designed to meet the neutral host needs of in-building systems, with low passive intermodulation (PIM). The system combines up to 8 wireless carriers in the operating bands to 4 multiple antenna feeds or distribution cables. One quarter of each input appears on each of the four outputs, with a dissipated path loss of less than 0.5 dB. Typical isolation between inputs in the same band is 22 - 24 dB, between bands 58 dB.

In this KM-99N a monitor of the sum of all outputs is provided, a useful way of assessing performance without the need for system disconnection.

Different upper and lower bands and any or all of the connectors are available in 7-16 mm DIN to order. (09/10)

Inputs L1 to L4:	698 - 960 MHz, Low Band
Inputs H1 to H4:	1710 - 2700 MHz, High Band
Input Isolation, dB:	Within Low Band: 24 typ., 22 dB min.
	Within High Band: 22 typ., 20 dB min.
Between Bands:	>55 dB
Input Return Loss:	>19 dB (>21 dB typical)
Coupling (In-Out):	6.5 ± 0.8 dB (all paths)
Power per input:	<60W avg., 3 kW peak
Total power in:	<200W average
Impedance:	50Ω nominal
Environment:	-15°C to +65°C, Indoor
PIM (Intermod):	<-142 dBc (+43dBm x2)
Finish: Housing:	RoHS coated aluminum
Connectors:	Triplate, N, except SMA for monitor
Weight:	24 lbs (11 kg) nominal

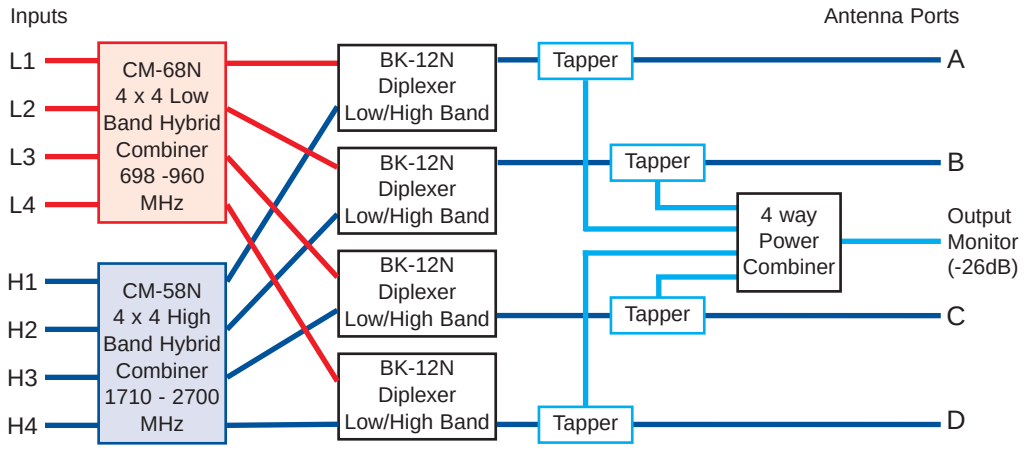

Microlab, A Wireless Telecom Group Company, 25 Eastmans Road, Parsippany, NJ 07054
Tel: (973) 386-9696 • sales@microlab.fxr.com • www.microlab.fxr.com • Fax: (973) 386-9191

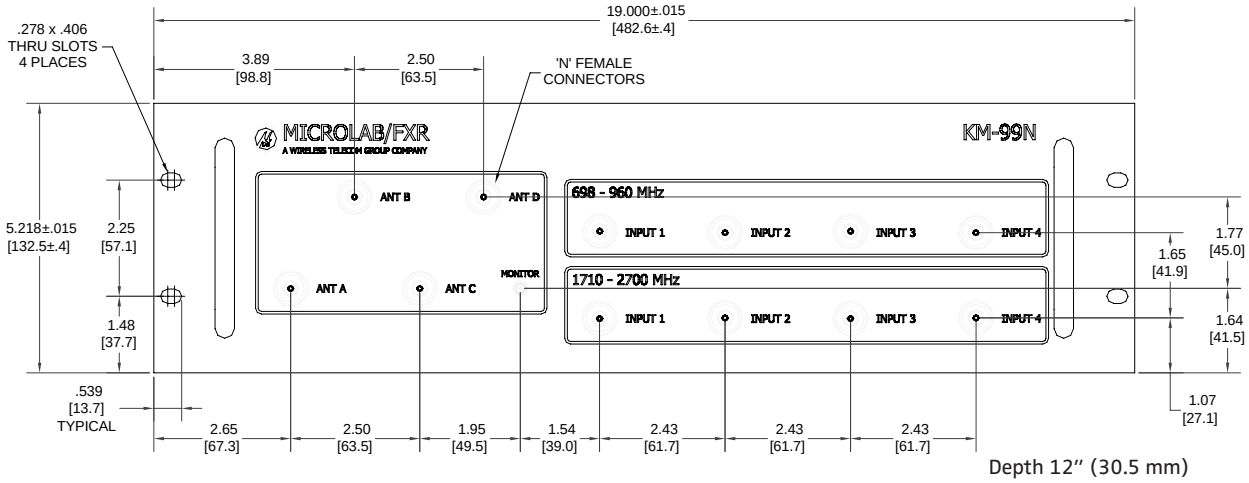

Depth 12" (30.5 mm)

Standard Combiner Boxes - all provide 4 combined outputs

Model Number	Total Inputs	380 - 520 UHF/Tetra	698 - 793 LTE-700	824 - 960 Cellular/GSM	1710-1880 GSM-1800	1920-2170 GSM-1900/UMTS	2400-2700 LTE/WiMAX	Other Features
KM-90N	8	-	xxxxxxxx[4]xxxxxxxx		xxxxxxxxxxxxxxxxxx[4]xxxxxxxxxxxxxxxxxx			-
KM-91N	12	xx[4]xx	xxxxxxxx[4]xxxxxxxx		xxxxxxxxxxxxxxxxxx[4]xxxxxxxxxxxxxxxxxx			-
KM-92N	12	-	xxxxxxxx[4]xxxxxxxx		xxxxxxxxx[4]xxxxxxxxx		xx[4]xx	-
KM-93N	16	xx[4]xx	xxxxxxxx[4]xxxxxxxx		xxxxxxxxx[4]xxxxxxxxx		xx[4]xx	-
KM-94N	16	-	xx[4]xx	xx[4]xx	xxxxxxxxx[4]xxxxxxxxx		xx[4]xx	-
KM-95N	12	-			xx[4]xx	xx[4]xx	xx[4]xx	-
KM-99N	8	-	xxxxxxxx[4]xxxxxxxx		xxxxxxxxxxxxxxxxxx[4]xxxxxxxxxxxxxxxxxx			Test Port*

*Provides SMA test port to monitor sum of all outputs (Available on all models to order)