Cellular/UMTS/LTE Combiner, KM-96D

4 x 2 Combiner for Neutral Host In Building Systems
698 - 960/1710 - 2,700 MHz, 7-16 mm in, N out

- Input bands for GSM, UMTS & LTE-2600: 698 to 960 and 1710 to 2700 MHz
- 4 Inputs to 2 Combined Outputs
- Guaranteed PIM, and Low Loss
- High Reliability, RoHS
- Standard 1RU EIA Rack (1$^3/_4$")

These broadband RF Combiner Boxes have been designed to meet the neutral host needs of smaller in-building systems, with low passive intermodulation (PIM). The system combines up to 2 wireless carriers in two operating bands to 2 multiple antenna feeds or distribution cables. Through the use of hybrids and diplexers, the total loss for each path is less than 1 dB, provided both outputs are utilized.

Typical isolation between inputs in the same band is 25 dB, between bands 55 dB. (09/10)

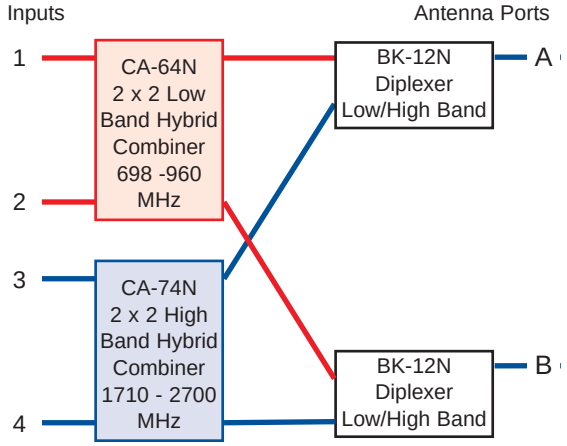

Inputs 1 & 2:	698 - 960 MHz
Inputs 3 & 4:	1710 - 2700 MHz
Input Isolation:	Within Band: >22 dB
	Between Bands: >55 dB
Input Return Loss:	>19 dB (>23 dB typical)
Outputs A and B:	698 - 2700 MHz
Output Return Loss:	>15.5 dB
Coupling (In-Out):	3.5 ± 0.5 dB (all paths)
Power per input:	<100W avg., 3 kW peak
Total power in:	<200W average
Impedance:	50Ω nominal
Environment:	-15°C to +65°C, Indoor
PIM (Intermod):	<-142 dBc (+43dBm x2)
Finish: Housing:	RoHS coated aluminum
Connectors:	Triplate, DIN input, N output
Weight:	22 lbs (10 kg) nominal

Outline of Similar Unit

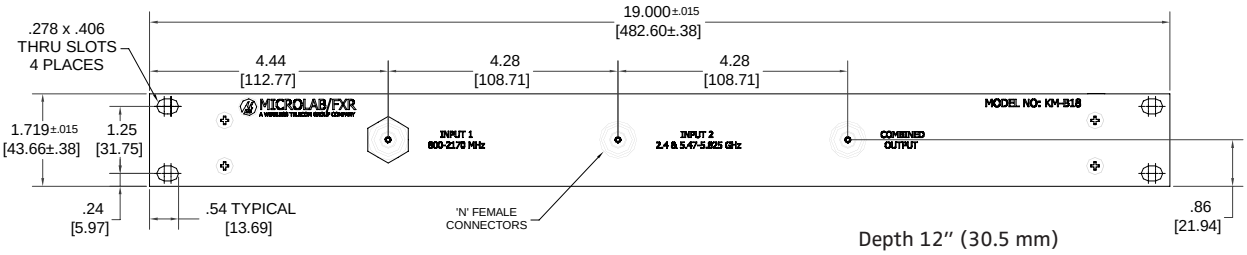

Microlab, A Wireless Telecom Group Company, 25 Eastmans Road, Parsippany, NJ 07054
Tel: (973) 386-9696 • sales@microlab.fxr.com • www.microlab.fxr.com • Fax: (973) 386-9191