Active/Fiber DAS Interface, KM-52D

Multiple BTS, DAS System Conditioner
1710 - 2170 MHz, 6dB

Preliminary Data

- Interface of 4 BTS with Tx/Rx ports and Low Power Simplex DAS system
- Independently adjustable Tx and Rx levels
- Guaranteed Low PIM, High Isolation
- High Reliability, RoHS compliant
- Standard 3RU EIA Rack (5.25")

This Signal Conditioner Shelf, CM-52D, is designed to interface four Tx/Rx signal blocks in the 1900 band, with a simplex DAS system. It allows independent level adjustment of the Tx and Rx elements of a wireless signal, when the signal is already split into Tx and Rx paths.

The unit first duplexes each of the Tx/Rx inputs, of which the Tx outputs are combined using a 4:1 Hybrid Combiner. The combined Tx signal is then attenuated by a fixed 6dB attenuator before it is fed to a 0-30 dB level adjustment for optimum DAS performance. The interface is rated for input Tx powers up to 60W/input.

The DAS Rx signal is fed to a similar level adjustment, before being split into six, with 4 to the Duplexers and 2 Rx to location monitoring ports. (09/11)

Frequency:	Four blocks in 1710-2170 MHz
Return Loss:	>18 dB, all ports
Tx Power/input:	60W avg max., 3 kW max pk.
Total Power In:	8W (requires no fixed pad) 30W (requires 6dB fixed pad) 80W (requires 10dB fixed pad) 200W (requires 15dB fixed pad)
Tx Path: (with 6 dB pad)	13 dB min. attenuation plus an adjustable 30 dB in 1 dB steps.
Rx Path:	9 dB min. attenuation plus an adjustable 30 dB in 1 dB steps.
Tx Isolation:	
Tx/Rx	To other Tx/Rx: >65 dB
Tx1..Tx4	To other Tx >25 dB
Rx1..Rx4	To other Rx >20 dB
IMD, typical:	<-118 dBm in Rx band at input using two +43dBm tones
Impedance:	50Ω nominal
Environment:	0°C to +55°C, IP64
Housing:	Passivated aluminum
Connectors:	7-16(f), Triplate, SMA (f) gold
Weight:	40 lbs. nom.

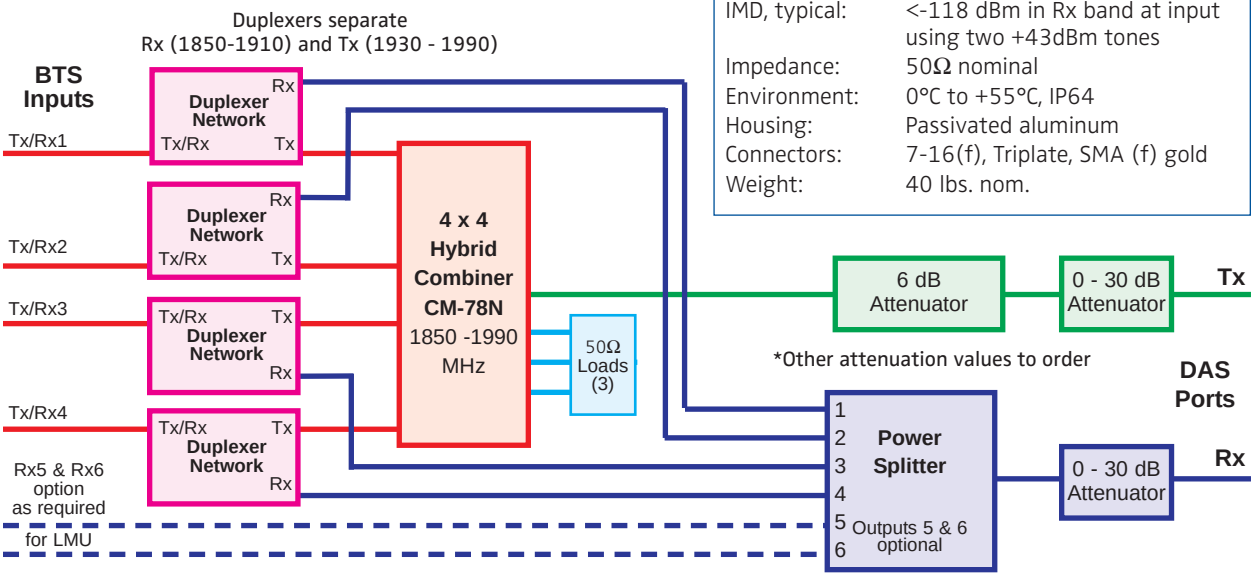

Microlab, A Wireless Telecom Group Company, 25 Eastmans Road, Parsippany, NJ 07054
Tel: (973) 386-9696 • sales@microlab.fxr.com • www.microlab.fxr.com • Fax: (973) 386-9191